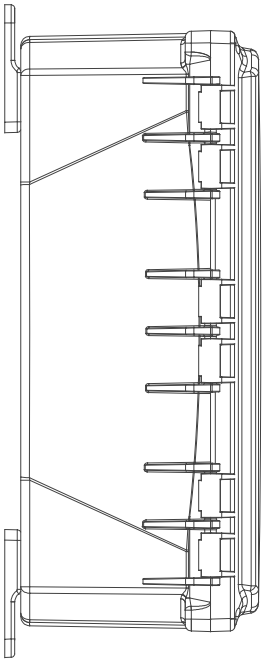

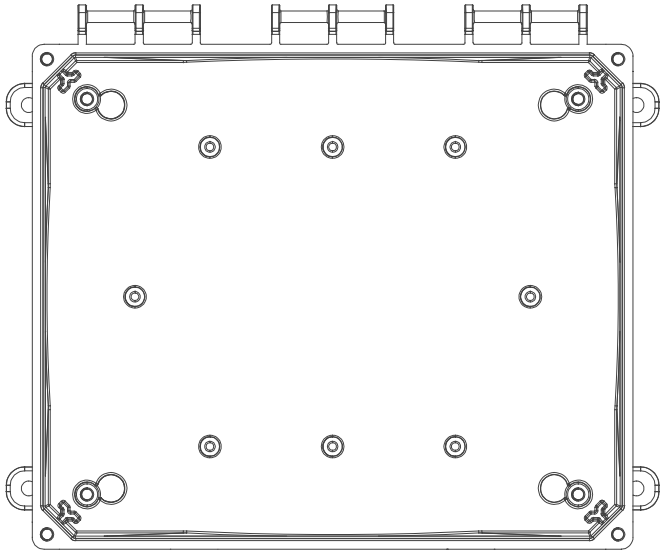

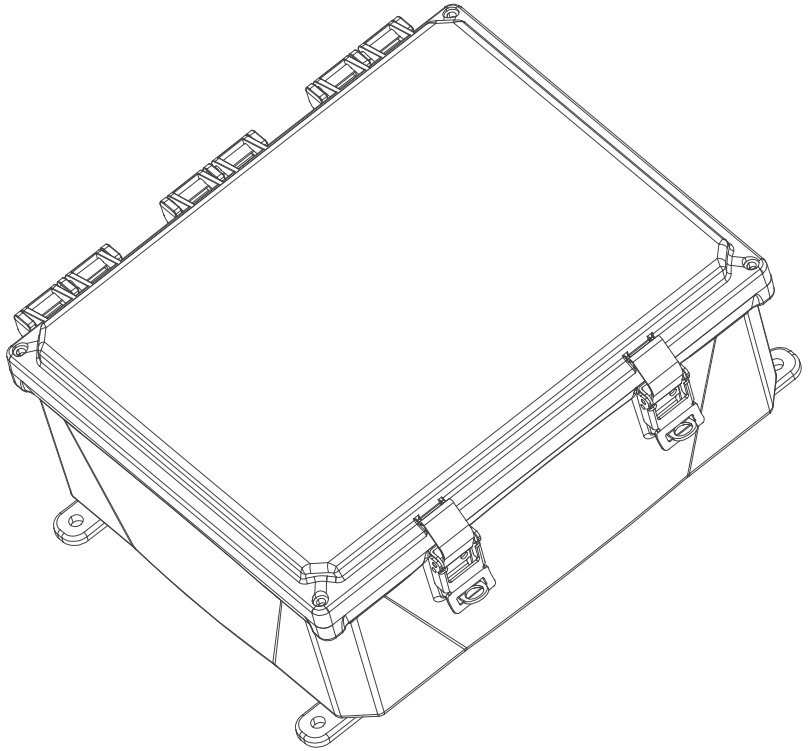

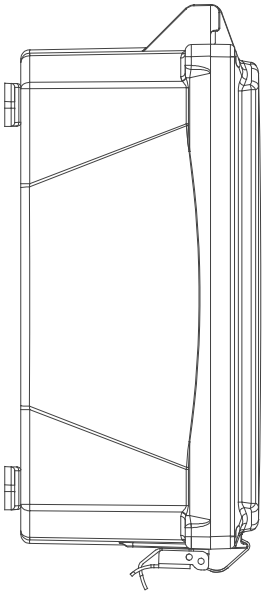

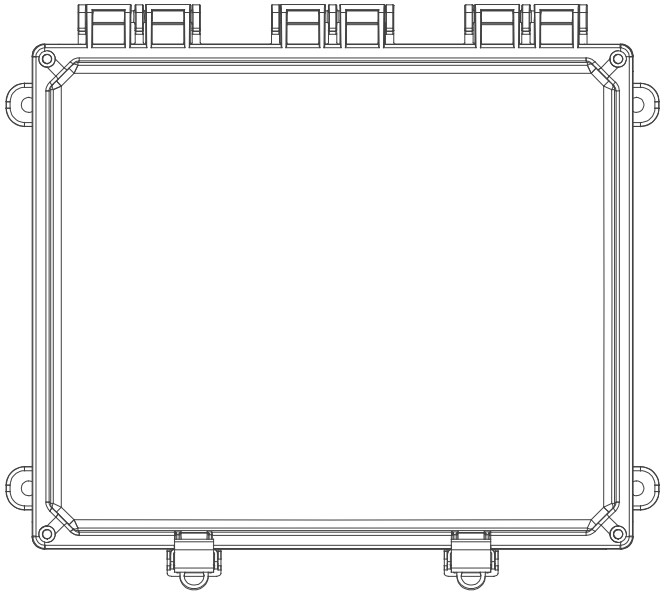

Integra Encosures, Inc.	Document Name: <document name>		Document Version: <version>
	Document Description: <document description>		
	Created By: <cr. operator>	Creation Date: <creation date>	Scale: 1:1
Part Description: **12 x 10 x 4 External Hinged Enclosure - Typical**		Heat Treatment: <heat treatment>	
		Surface Treatment: <surface treatment>	
Part Number: <part number>		Part Version: **<version>**	